RICOM

产品规格书

Product Specification

Model No.	IR02812FB.ICR(5MP)

福建福光股份有限公司
Fujian Forecam Optics Co., Ltd.

修订履历

Version	Date	Reviser	Approved	Comments
V1.00	2016/06/23	Riming Jiang	Shizhong Zhang	First edition
V1.01	2016/08/18	Wei Jiang	Shizhong Zhang	Revised FOV, View Point

目录 Table of Content

1 封面 Cover 1
2 修订履历 Revision Notes 2
3 目录 Table of Content 2
4 概述 Outline 3
5 主要参数 Main Items 3
5.1 光学规格 Optical Specifications 3
5.2 机械规格 Mechanical Specification 3
5.3 结构图 Drawing 4
5.4 环境规格 Environment Specifications 4
6 测试 Test 4
6.1 光学性能 Optical Performance 4
6.2 外观测试 Appearance Performance 4
6.3 可靠性测试 Reliability Test 5
7 镜头附件 6
7.1 红外滤光片 IR-CUT 6

4 概述 Outline

5 主要参数 Main Items

5.1 光学规格 Optical Specifications

	项目	Items	Description	Tolerances
1	焦距	Focal length	2.8mm (W) ~ 12mm (T)	±5%
2	相对孔径	Aperture (D/f')	F1.4 (W) ~ F2.8 (T)	±5%
3	成像靶面	Image Circle	1/2.7"	φ≥6.9mm
4	成像范围	Focus range	0.3m~INF	/
5	TV 畸变	TV distortion	-12% (1/3.2" 4:3) -15% (1/2.8" 16:9)	/
6	主光角	Chief ray angle	<7°	/
7	视场角 （极限）	FOV (M.O.D)	CMOS D H V OV5653 2592×1944 104~32° 81~26° 59~20° OV4689 2688×1520 113~35° 99~31° 53~18° OV4689 2304×1296 96~30° 83~27° 45~15°	±5%
8	视场角 （固定后焦）	FOV (Focus on INF)	CMOS D H V OV5653 2592×1944 99~33° 77~27° 56~20° OV4689 2688×1520 107~36° 94~32° 50~18° OV4689 2304×1296 91~31° 79~28° 43~16°	±5%

5.2 机械规格 Mechanical Specification

	项目	Items	Description	Tolerances
1	接口	Mount	φ14	±0.02mm
2	光学构成	Lens structure	6 groups, 9 elements	*
3	光学总长	Total track length	50.7mm (W)	±0.1
4	法兰后焦	Flange focal length	13.1mm (W) ~ 13.8mm (T)	±0.1
5	机械后焦	Back focal length	6.6mm	±0.1
6	重量	Weight	23g	±10%
7	操作方式	Operation	变倍 Zoom 手动 Manual 聚焦 Focus 手动 Manual 光圈 Iris 固定 Fixed	*

5.3 结构图 Drawing

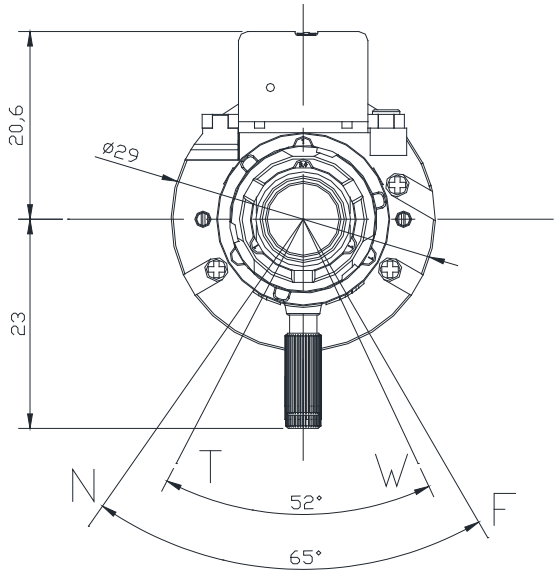

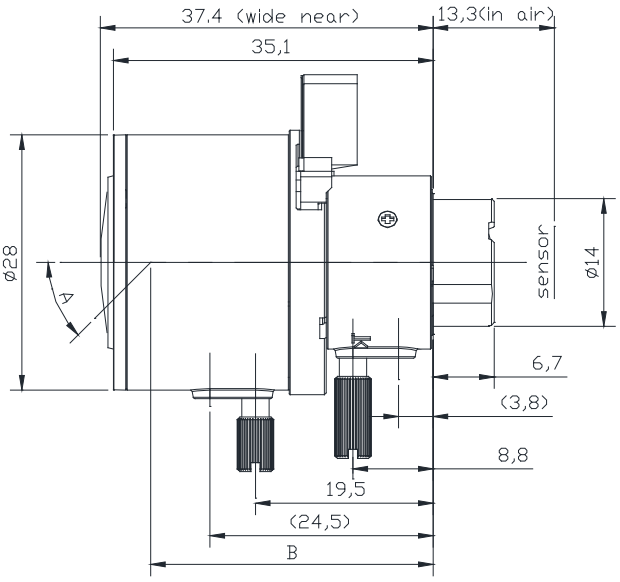

公差 Tolerance(mm)		0~10 ±0.05	10~30 ±0.10	30-120 ±0.30	Angle ±2°
视点 View Point (M.O.D)	Item	OV5653 2592×1944	OV4689 2688×1520	/	/
	A	52°	56.5°	/	/
	B	28.5mm	29.2mm	/	/

5.4 环境规格 Environment Specifications

	项目	Items	Description
1	工作温度	Working environment	-20℃～60℃; 10～90%RH
2	储存温度	Storage environment	-30℃～70℃; 10～90%RH
3	环保	HSF	RoHS

6 测试 Test

6.1 光学性能 Optical Performance

	项目	Items	Description				
1	分辨率测试	Resolution Test (lp/mm)		Center	φ4.5	φ6	Φ8
			5MP	≥250	≥200	≥160	/
2	测试方法	Test Method	• 0.6m of projection distance (W) • 1.5m of projection distance (T) • At max aperture. Focus on center, and then check edges.				

6.2 外观测试 Appearance Performance

	项目	Items	Description
1	外观	Appearance	• Dust standard: 60-20 • Scratches: Width<60um, Length<D/2 • Spot: φ<200um, 100~200um≤3
2	测试方法	Test Method	• Visual inspection

6.3 可靠性测试 Reliability Test

6.3.1 测试方法 Test Method

	项目	Test Item	Specification
1	高低温测试 （储存）	Temperature test (non-operating)	• 70°C, normal humidity, 72hours • 30°C, normal humidity, 72hours
2	温度循环 （储存）	Temperature cycle test (non-operating)	2hours / 2hours / 2hours -30°C / 70°C / -30°C • Stay 2 hours each phase, 10 cycles totally
3	温度循环 （工作）	Temperature cycle test (Operating with camera)	2hours / 2hours / 2hours -20°C / 60°C / -20°C • Stay 2 hours each phase, 10 cycles totally
4	温度循环 （带包装）	Temperature Cycle Test (With package)	2hours / 2hours / 2hours -30°C / 70°C / -30°C • Stay 2 hours each phase, 10 cycles totally
5	冷热冲击 （储存）	Thermal shock test (non-operating)	0.5 hours / 0.5hours / 0.5hours -30°C / 70°C / -30°C • Stay0.5 hours each phase, 10 cycles totally
6	振动测试 （储存）	Vibration test (non-operating)	• 1.5G, Sine- Wave 10 ~ 450 Hz for 1.0 octave/min; X/Y direction for 0.5 hour; Z direction for 1 hour
7	振动测试 （带包装）	Vibration test (With package)	• 1.5G, Sine- Wave 10 ~ 450 Hz for 1.0 octave/min; X/Y direction for 0.5 hour; Z direction for 1 hour
8	跌落测试 （带包装）	Drop test (With package)	• Drop height: 100 cm • Drop position: 1 corner, 3 edges, 6 planes

6.3.2 使用寿命测试 Life Test

	项目	Items	Description
1	自动光圈	Auto-Iris	• Testing condition: Auto-Iris control board, Voltage 3.5V • Iris cycle index: at least 300,000 times • Iris close →open →close, 1 cycle 4~8 seconds
2	P 光圈	P-Iris	• Testing condition: P-Iris Control board, Voltage3.5V • P-Iris cycle index: at least 300,000 times • Iris close →open →close, 1 cycle 5~10 seconds
3	IR-Cut	IR-Cut	• Testing condition: IR-Cut control board, Voltage3.5V • IR-Cut close →open →close, 1 cycle 0.5~1 seconds • IR-Cut working index: at least 50,000times
4	聚焦/变倍马达	Zoom/focus stepping motor strength test	• Drive voltage: 5V, 300 PPS • Focusing: hit 20 steps →stop 2s →hit 20 steps • Zooming: hit 20 steps →stop 2s →hit 20 steps • Hit times: about 50,000 times

*All tests are doing under the standard parameter settings of testing machine. Lens will be judged as qualified when the motor can be driven normally without jump, idling, stalling and other anomalies. Testing environment: 27±2°C; 45%±5%RH

7 镜头附件

7.1 红外滤光片 IR-Cut

7.1.1 Connector and Cord Specification

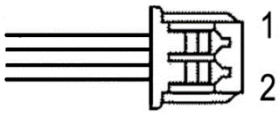		Housing	Molex 51021-0200
		Terminal	Molex 50058-8000
		Pitch	1.25mm
1. Red	2. Black	Cable Length	110mm

7.1.2 IR-Cut Specification

Motor	Driving Coil	25Ω at 20℃
	Storage Temperature	-30 ~ 70℃
Operating	Operating Voltage	3.5 ~ 5V
	Operating Mode	One-shot (100 ~ 200ms)
	Temperature	-30 ~ 70℃

7.1.3 IR-Cut Filter

IR Mode	Day Mode
1. Red +	1. Red -
2. Black -	2. Black +
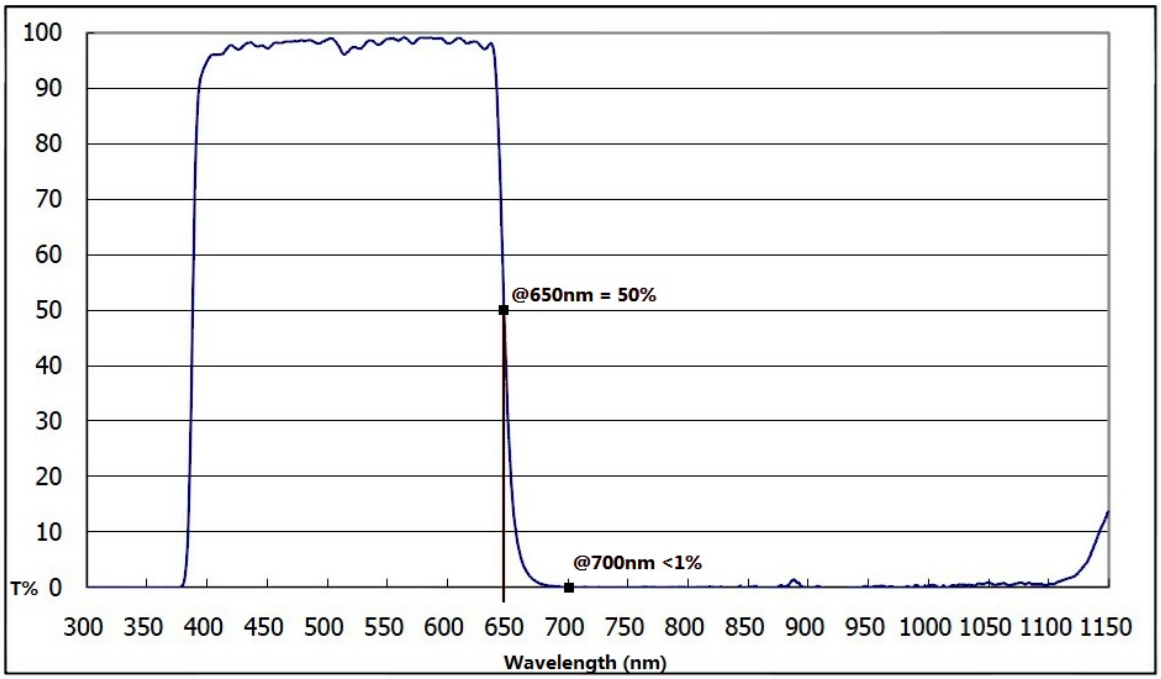
7.1.4 IR-Cut Optical Characteristic Curve